ROGER TECHNOLOGY

ROGER BRUSHLESS

ECO 100% Low Tension 24V-36V

BIONIK

The BRUSHLESS automated barrier with digital thinking

Primo Florian: Founding partner - Engineering and design,
Dino Florian: Founding President - Development and design,
Renato Florian: Founding partner - Assembly and quality

PEOPLE AND IDEAS

From the very beginning roger technology has evolved and grown because it's people believe that any bright idea can lead to great change in the future. Our people are passionate and innovative in our approach to every challenge, allways pushing the boundaries to develop extraordinary products.

PRODUCT EXPERIENCE

In our language we translate the word "experience" as passion. It is this passion that drives us in the development of revolutionary new products that serve the real needs of our customers.
We understand that our customers want a product designed around the way that they work.

Excellent raw materials

Steel, ductile cast iron, aluminium, bronze, copper and titanium have always been the main and exclusive raw materials used in the advanced engineering processes of our company.

Production technology

At Roger Technology all internal manufacturing is carried out on optimised production lines making use of very advanced technology. We have invested heavily in robotics and automated all product manufacturing phases.
This ensures that all components and semi-finished products are highly reliable. and are fully complient with our exceptionally high quality standards.

Internal assembly

Our highly qualified and dedicated staff oversee the fitting and assembly stages. Every piece of equipment is checked by our all italian personnel to ensure that we deliver reliable products to our customers.

Motor production

WE ARE THE CREATORS AT THE HEART OF THE PRODUCT!
All of our digital brushless motors are designed and manufactured in our own factories. Using dedicated automated machines the motors are wound with ultimate precision.

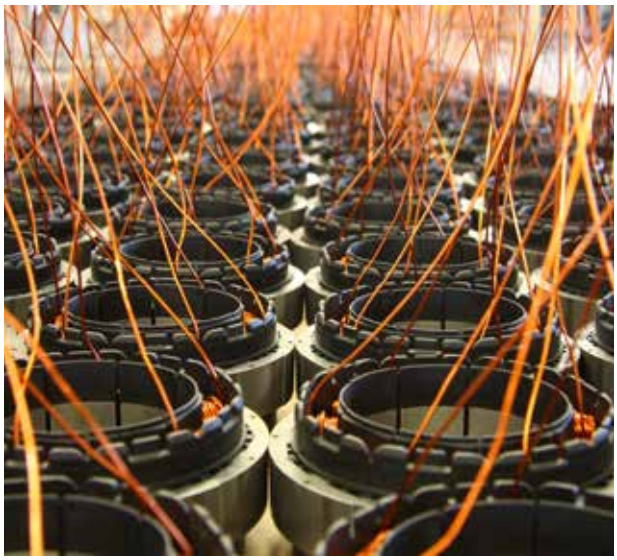

A digital brushless motor with permanent magnetic field, digital electronics for the complete management of the automation system control. Designed for super intensive use with the added benefit of a super low power consumption.

THIS IS BRUSHLESS

Digital Brushless Motor

Revolutionary and innovative digital Brushless motor with permanent magnetic field, 36V three-phase sinusoidal power supply with native encoder that allows super-intensive use of the automation system with extremely low power consumption, not only providing 100% compliance with all control and safety requisites of the automation system.

New Generation of Electronics

The new control unit with onboard Brushless digital controller (36V DC). Without traditional relays and thanks to its revolutionary MOSFET quadrant system and its control technology entirely based on a DSP microcontroller, it represents a new generation of electronic cards created to safely handle every type of automation movement.

Engineering Passion

All the mechanical components and gears are manufactured in steel, cast iron and bronze. The automation system casings are made from titaniumreinforced die-cast aluminium. All the gears are inspected and assembled on high-quality bearings and inserted on precise seats machined to provide absolute precision between the axes.

3-PHASE DIGITAL BRUSHLESS MOTOR

A very powerful motor with substantial torque. The motor is compact and neat due to the special concentrated coil windings, it is powered by a three phase sinusoidal system.

DIGITAL AND VECTORIAL AUTOMATION CONTROLLER

The BRUSHLESS digital controller, which operates at low voltage 36V DC, allows 100% control of the automation system in digital mode. Due to its operation entirely based on a DSP microcontroller the travel and all the movements of your automation system can therefore be programmed and customised easily, precisely and elegantly.

SPEED, ACCELERATION AND DECELERATION WITH EXTREME ELEGANCE

The automation system with brushless digital technology creates perfect and elegant movements. With a constant force and torque at every point and with the option of varying the speed on deceleration and acceleration the system can be managed with maximum safety.

EXTREMELY LOW ENERGY CONSUMPTION

A motor that can operate at low voltage in super-intensive use and which can operate in environments with extremely demanding weather conditions while maintaining very low energy consumption and absorption levels. We can move a 600 kg sliding gate and use less than 30W of power.

NO PROBLEM IN THE EVENT OF POWER FAILURE

With the help of internal or external batteries and the associated battery charging card, your automation system continues to operate for a considerable time even during prolonged power cuts, ensuring many more operations than traditional technologies.

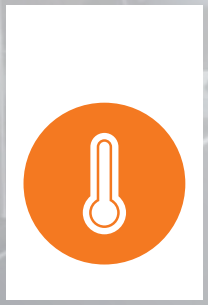

MOTOR AT AMBIENT TEMPERATURE

The BRUSHLESS motor was brought into being with the main goal of being a motor for super-intensive use with an efficiency of 99%. Regardless of how many operations the engine performs in a day, it always remains cold or at most reaches the outside ambient temperature.

COMPLETELY BRUSHLESS

The revolutionary digital motor which is 12 ways different

THE DIGITAL SILENCE OF THE MOTOR

One great impact is the silence or the near absence of noise, generated by the BRUSHLESS motor during all its movements.

MOTOR FOR SUPER-INTENSIVE USE

We wanted to surprise you with a fundamental fact: The super intensive use of the automation system with the motor which remains permanently cold even after many days of use.

IMPACT, OBSTACLE DETECTION AND REVERSAL IN TOTAL SAFETY

Thanks to digital technology we are able to detect an obstacle and reverse the motor instantly, by simply specifying the torque of the motor, the sensitivity, the time and the travel of the reversal. And in complete compliance with all safety requisites.

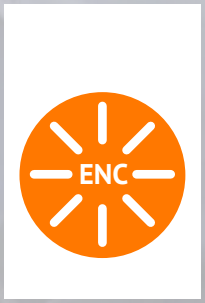

ONBOARD NATIVE DIGITAL ENCODER

The BRUSHLESS motor has a highly advanced native digital encoder that controls management of automation systems in a safe, precise and extremely elegant manner.

SIMPLE INSTALLATION WITH A SINGLE 3-WIRE CABLE

And the BRUSHLESS motor can be installed by simply connecting it using a single 3-wire cable! What could be easier? This will provide fully digital management of your automation system thanks to SENSORED technology depending on the type of automation system.

ADVANCED PRECISION ENGINEERING TO OBTAIN OPTIMAL MOTOR PERFORMANCE

We have created a mechanism that gives you the opportunity to get the maximum performance out of the motor. A product which combines the quality of the internal production processes, the mechanical processing and the use of high quality ferrous and non-ferrous materials.

A technology that offers maximum performance but consumes less power than other motors

BIONIK4, EQUAL ONLY TO ITSELF

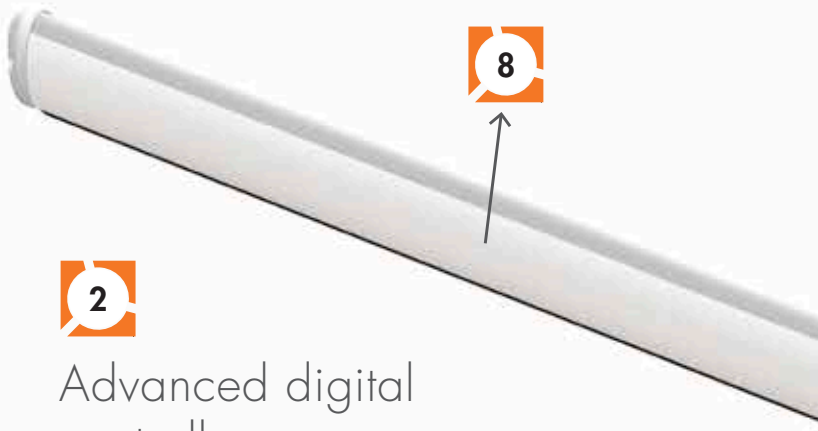

1

Digital 36V BRUSHLESS motor

Innovative, revolutionary 36V Brushless digital motor with permanent magnetic field and a SENSORED digital technology encoder that permits unlimited use of the barrier with extremely reduced consumption and a mechanical absolute positioning system.

2

Advanced digital controller

Easy to access, thanks to its position in the upper part of the barrier, well protected in the basket containing all the electronics, transformer compartment and support batteries. The digital controller ensures total, accurate management.

3

Gear motor with perfect gears

The gear motor is a mechanical jewel made entirely of aluminium, steel and bronze. All the gears are helicoidal with a 15° tilt, assembled on top quality bearings and inserted in perfectly machined seats to guarantee the absolute precision of the gear axes.

4

Small but highly resistant structure

The materials employed - steel and bronze - are top quality to ensure optimum robustness for the automation, making it highly stable during use. A vital role is also played by the surface treatment and the types of varnish, designed to make the barrier structure particularly resistant to a wide range of atmospheric agents.

BRUSHLESS BECAUSE

Sturdy and elegant, to manage accesses to condominiums, commercial premises, industrial sites and residential areas.

5

Linkage lever and springs

Different types of spring are available, according to the length of the boom and certified for millions of manoeuvres. Mechanical linkage lever with adjustable mechanical stops.

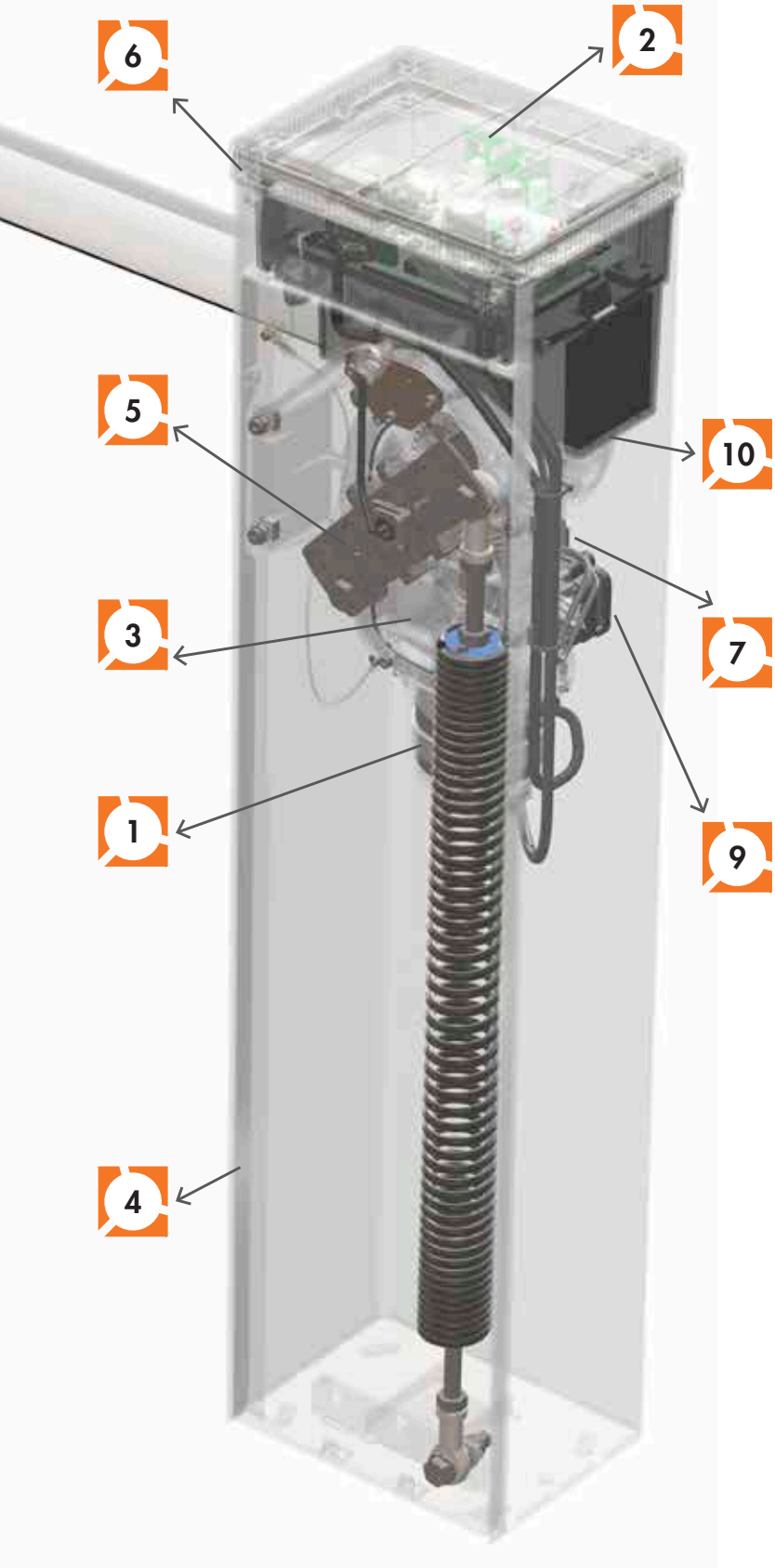

6

LED lighting

Elegant LED lighting circuit all over the aluminium head of the barrier column.
Can be configured via the control unit.

7

Absolute mechanical positioner

Powerful, innovative and accurate encoder with absolute positioning, mounted on the slow reducer shaft. Allows movements to be managed in tenths of a degree, and ensures perfect automation restart without relearning after the blackout or manual release phases.

8

Robust, elliptic boom

Aluminium boom with an elliptical section providing greater wind resistance, and central ribbing for even greater stability and robustness. Integrated signalisation LED on the upper side. Can be configured via the control unit.

9

Robust, innovative release

Mechanical manual release with standard cylinder lock, able to unlock the barrier in any situation thanks to its excellent mechanics based on a twin-acting elliptical lever.

10

Bionic boom support arm

Bionic support and protection arm in die-cast aluminium, directly connected to the reducer via a special system for pre-reducing the mechanical stress of the boom movement.

BIONIK6, EQUAL ONLY TO ITSELF

1

Digital 36V BRUSHLESS motor

Innovative, revolutionary 36V Brushless digital motor with permanent magnetic field and a SENSORED digital technology encoder that permits unlimited use of the barrier with extremely reduced consumption and a mechanical absolute positioning system.

2

Advanced digital controller

Easy to access, thanks to its position in the upper part of the barrier, well protected in the basket containing all the electronics, transformer compartment and support batteries. The digital controller ensures total, accurate management.

3

Gear motor with perfect gears

A veritable mechanical "gem, the gear motor is a made entirely of aluminium, steel and bronze. All gears are helicoidal with a 15° tilt, assembled on top quality bearings and inserted in perfectly machined seats to guarantee absolute precision of the gear axes. The take-off of the connecting shaft to the boom is of 45 mm.

4

Highly resistant structure

The materials employed - steel and bronze - are top quality to ensure optimum robustness for the automation, making it highly stable during use. A vital role is also played by the surface treatment and the types of varnish, designed to make the barrier structure particularly resistant to a wide range of atmospheric agents.

BRUSHLESS BECAUSE

Sturdy and elegant manage accesses to commercial and industrial premises as well as heavy traffic parking lots.

5

Linkage lever and springs

Different types of spring are available, according to the length of the boom and certified for millions of manoeuvres. Mechanical linkage lever with adjustable mechanical stops.

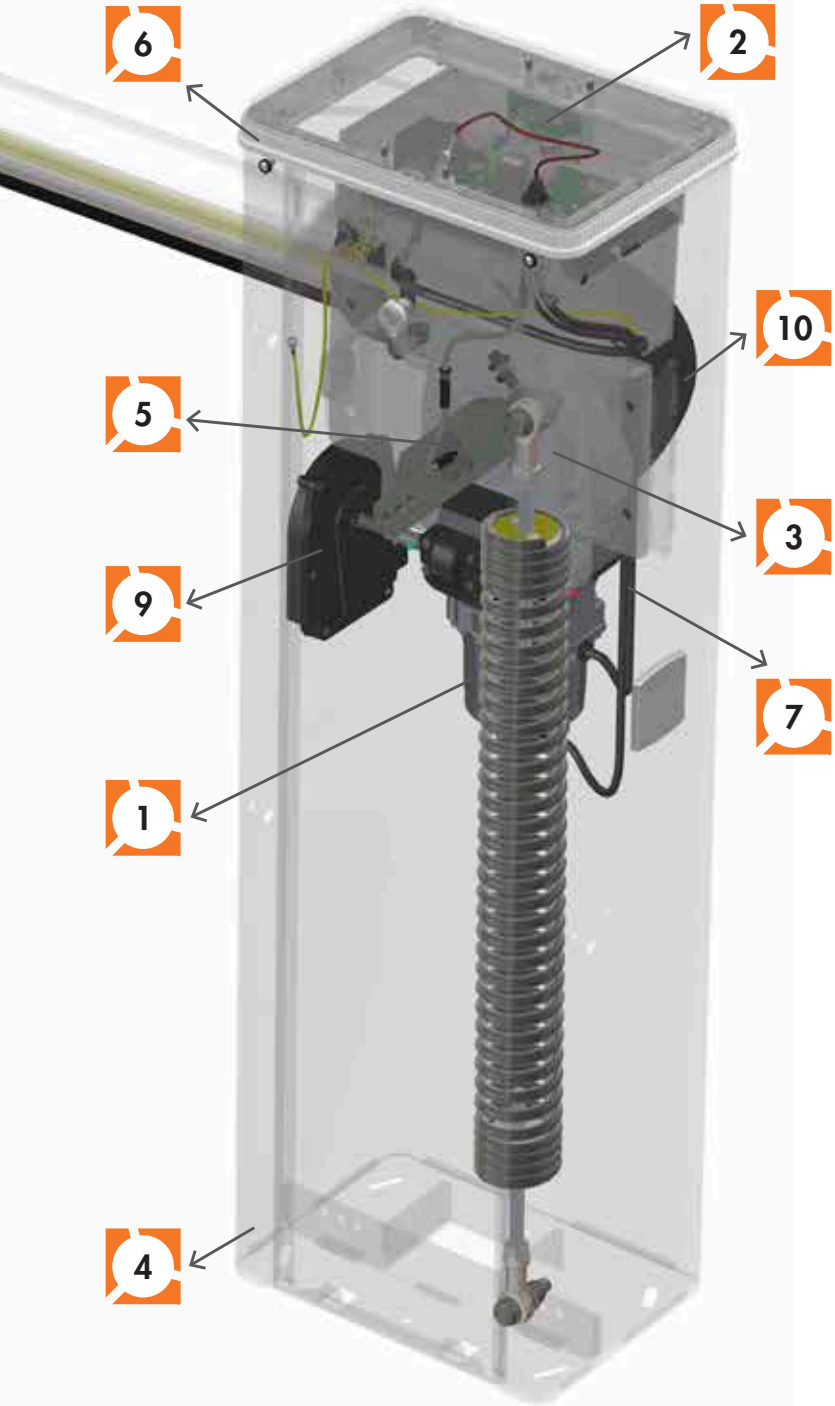

6

LED lighting

Elegant LED lighting circuit all over the aluminium head of the barrier column.
Can be configured via the control unit.

7

Absolute mechanical positioner

Powerful, innovative and accurate encoder with absolute positioning, mounted on the slow reducer shaft. Allows movements to be managed in tenths of a degree, and ensures perfect automation restart without relearning after the blackout or manual release phases.

8

Robust, elliptic boom

Elliptical section, wind-resistant aluminium boom with central ribbing, to provide even greater stability and sturdiness. Signalisation LED on both horizontal ends of the boom, integrated and configurable from the control unit.

9

Robust, innovative release

Manual mechanical release by key, with European cylinder able to release the boom for any requirement and in any situation, thanks to its excellent mechanical features.

10

Sturdy boom support flange

Extended cone double flange in die-cast aluminium for support and protection, directly connected to the reduction gear with 3 internal flanges fastening system, for a sturdy and safe mechanical movement of the boom.

BARRIER AVAILABLE ALSO WITH BOOM LENGTH UP TO 4 M

BIONIK4HP

BIONIK8, EQUAL ONLY TO ITSELF

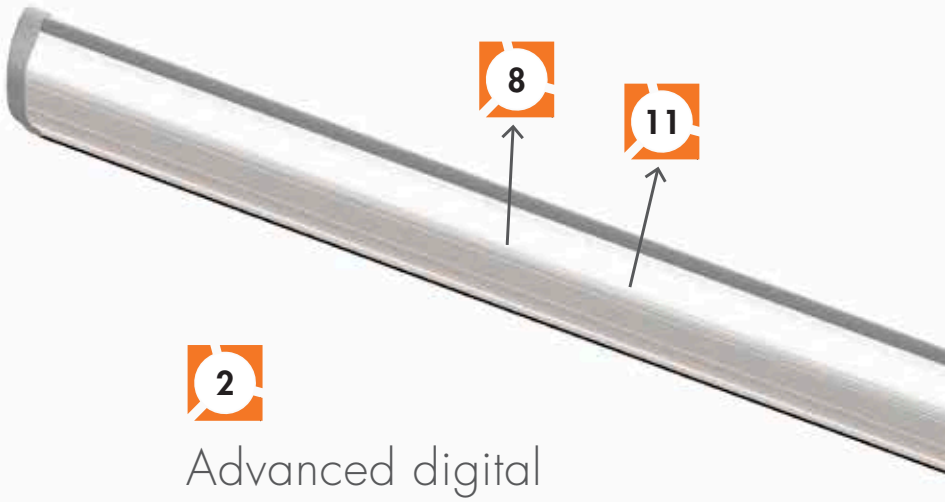

1

Digital 36V BRUSHLESS motor

Innovative, revolutionary 36V Brushless digital motor with permanent magnetic field and a SENSORED digital technology encoder that permits unlimited use of the barrier with extremely reduced consumption and a mechanical absolute positioning system.

2

Advanced digital controller

Easy to access, thanks to its position in the upper part of the barrier, well protected in the basket containing all the electronics, transformer compartment and support batteries. The digital controller ensures total, accurate management.

3

Gear motor with perfect gears

A veritable mechanical "gem, the gear motor is a made entirely of aluminium, steel and bronze. All gears are helicoidal with a 15° tilt, assembled on top quality bearings and inserted in perfectly machined seats to guarantee absolute precision of the gear axes. The take-off of the connecting shaft to the boom is of 55 mm.

4

Highly resistant structure

The materials employed - steel and bronze - are top quality to ensure optimum robustness for the automation, making it highly stable during use. A vital role is also played by the surface treatment and the types of varnish, designed to make the barrier structure particularly resistant to a wide range of atmospheric agents.

BRUSHLESS BECAUSE

Sturdy and elegant, to manage accesses to commercial premises, industrial sites and large logistics areas.

5

Sturdy boom support flange

Extended cone double flange in die-cast aluminium for support and protection, directly connected to the reduction gear for a sturdy and safe mechanical movement of the boom.

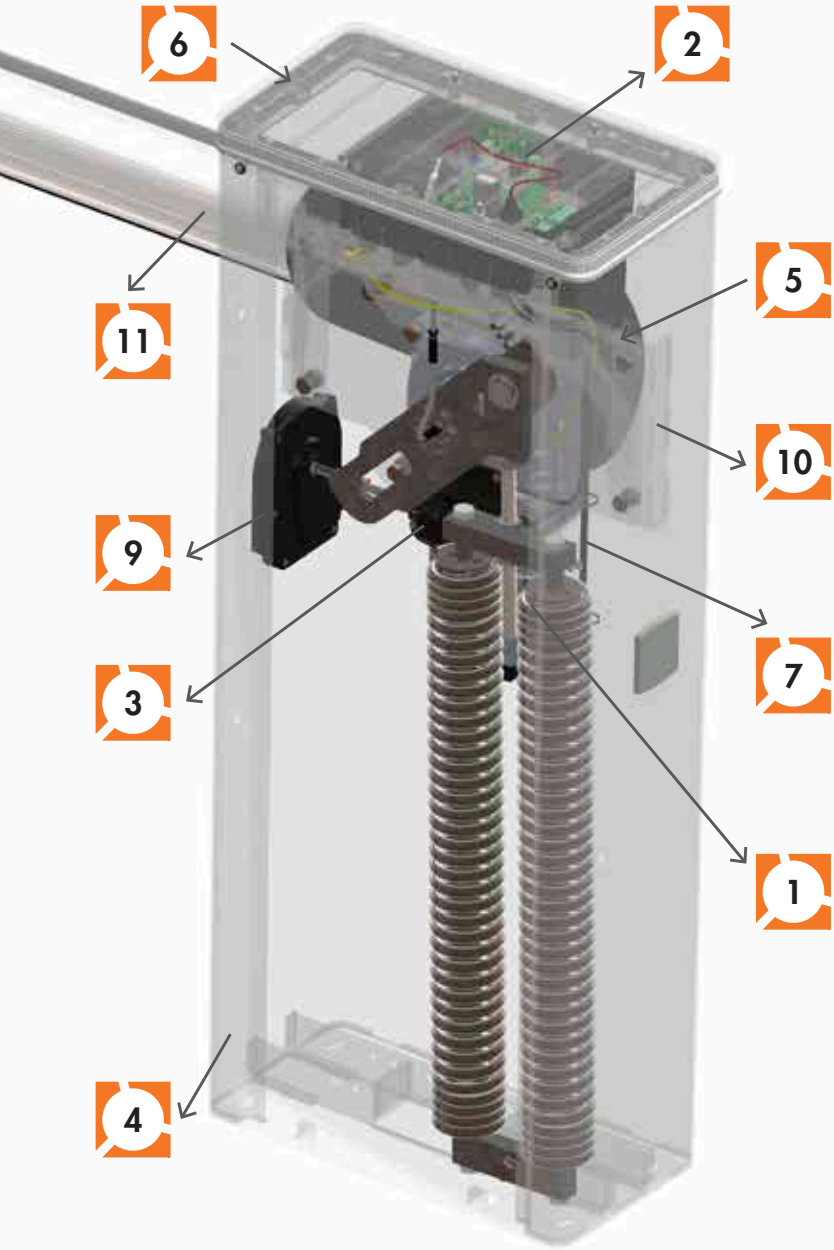

6

LED lighting

Elegant LED lighting circuit all over the aluminium head of the barrier column.
Can be configured via the control unit.

7

Absolute mechanical positioner

Powerful, innovative and accurate encoder with absolute positioning, mounted on the slow reducer shaft. Allows movements to be managed in tenths of a degree, and ensures perfect automation restart without relearning after the blackout or manual release phases.

8

Robust, elliptic boom

Elliptical section 4,100 mm aluminium Double Boom, wind resistant, with 2 strengthening telescopic inserts to fasten the boom to the flange and to connect the 2 booms through a dedicated aluminium double joint. Integrated signalisation LED on the upper side, configurable from the control unit.

9

Robust, innovative release

Manual mechanical release by key, with European cylinder able to release the boom for any requirement and in any situation, thanks to its excellent mechanical features.

10

New double spring linkage lever

Innovative linkage lever with toothed insert, which guarantees a correct, double and millimetric adjustment of the balancing of the 2 x 85 mm diameter springs.
Hooking of the double spring to the linkage lever with roller bearing for a better distribution of the boom load points, weights and stresses.

11

Telescopic reinforced supports

Two telescopic reinforced supports inside the boom, one for fastening to the support flange and the other for the joint between the two booms, 4,100 mm long, making the boom sturdy and safe.

ACCESSORIES
BIONIK BARRIER

OPTIONAL ACCESSORIES

	CODE	DESCRIPTION	BI/004	BI/004HP – BI/004HP/115	BI/004HP/IS – BI/004HP/IS/115	BI/006 – BI/006/115	BI/006/IS – BI/006/IS/115	BI/008	BI/001PE	BI/001PC – BI/001PC/115
	BAFS/01	Fixed end rest with rubber, not adjustable, for booms.	√	√	√	√	√	√		
	BAFS/02	Fixed end rest with rubber, telescopic and adjustable, for booms.	√	√	√	√	√	√		
	BAFS/03	Fixed end rest with rubber, not adjustable, with latch chain pre-setting.	√	√	√	√	√	√		
	BAFS/04	Fixed end rest with rubber, telescopic and adjustable, with latch chain pre-setting.	√	√	√	√	√	√		
	BAFS/05	Fixed end rest adjustable for barriers with magnetic suction cup.	√	√	√	√	√	√		
	BAMS/01	Hinged end rest for booms.	√	√	√	√	√	√		
	BAMS/01/EXT	20 cm extension for hinge rest in barrier booms (BAMS/01).	√	√	√	√	√	√		
	BA/68/3	Aluminium elliptical boom, painted white, 3 metre long, for BIONIK4 barrier with slot cover profile, in protective rubber and terminal plug.	√							
	BA/68/4	Aluminium elliptical boom, painted white, 4 metre long, for BIONIK4 barrier with slot cover profile, in protective rubber and terminal plug.	√							
	BA/60/3	Aluminium cylindrical boom, painted white, 3 metre long.								√
	BA/90/2	Aluminium elliptical boom, painted white, 2 metre long, with slot cover profile, in protective rubber and terminal plug.		√	√	√	√		√	
	BA/90/3	Aluminium elliptical boom, painted white, 3 metre long, with slot cover profile, in protective rubber and terminal plug.		√	√	√	√		√	

	CODE	DESCRIPTION	BI/004	BI/004HP – BI/004HP/115	BI/004HP/IS – BI/004HP/IS/115	BI/006 – BI/006/115	BI/006/IS – BI/006/IS/115	BI/008	BI/001PE	BI/001PC – BI/001PC/115
	BA/90/4	Aluminium elliptical boom, painted white, 4 metre long, with slot cover profile, in protective rubber and terminal plug.		√	√	√	√			
	BA/90/6	Aluminium elliptical boom, painted white, 6 metre long, with slot cover profile, in protective rubber and terminal plug.				√	√			
	BA/128/4	Aluminium elliptical boom painted white, 4+4, with LED cover, protective rubber and terminal plug for BIONIK8.						√		
	SND/BA/68/DW	Joint with 90° pivot point with lower tie-rod for BIONIK4 series booms.	√							
	SND/BA/68/UP	Joint with 90° pivot point with upper tie-rod for BIONIK4 series booms.	√							
	JNT/BA/90	Internal connecting joint, in anodised aluminium, inclusive of fastening screws, for BIONIK4HP series booms – BIONIK6.		√	√	√	√		√	
	SND/BA/90/DW	Joint with 90° pivot point with lower tie-rod for BIONIK4HP - BIONIK6 series booms.		√	√	√	√		√	
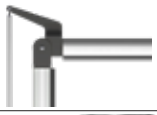	SND/BA/90/UP	Joint with 90° pivot point with upper tie-rod for BIONIK4HP - BIONIK6 series booms.		√	√	√	√		√	
	JNT/BA/128	Internal connecting joint, in anodised aluminium, inclusive of fastening screws, for BIONIK8 series booms.						√		
	BARK/02	Drop skirt in painted aluminium, with stainless steel screws mounted on bushings. Single module, 2 metre long.	√	√	√	√	√	√		
	BI/BAT/KIT	Connecting board kit and battery charger for Brushless digital controller CTRL - 36V DC complete with 2 12V DC batteries at 4.5 Ah. Specific kit for BIONIK barrier.	√	√	√	√	√	√	√	√
	BI/BCHP	Battery charger for 36V DC Brushless digital controller CTRL, without batteries, specific for BIONIK barrier.	√	√	√	√	√	√	√	√

ACCESSORIES
BIONIK BARRIER

OPTIONAL ACCESSORIES

	CODE	DESCRIPTION	BI/004	BI/004HP – BI/004HP/115	BI/004HP/IS – BI/004HP/IS/115	BI/006 – BI/006/115	BI/006/IS – BI/006/IS/115	BI/008	BI/001PE	BI/001PC – BI/001PC/115
	BT12V45	Pair of 12V 4.5 Ah batteries.	√	√	√	√	√	√	√	√
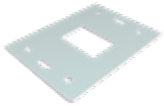	KT240	Complete fastening base and screws for BIONIK4 series.	√							
	KT230	Complete fastening base and screws for BIONIK1 - BIONIK4HP - BIONIK6 series.		√	√	√	√		√	√
	KT230/IS	Complete fastening base in AISI 304 stainless steel and screws for BIONIK1 - BIONIK4HP - BIONIK6 series.		√	√	√	√		√	√
	KT244	Complete fastening base and screws for BIONIK8 series.						√		
	KT231	Fastening base for fixed end rests codes BAFS/01, BAFS/02, BAFS/03, BAFS/04, BAFS/05.	√	√	√	√	√	√		
	B73/EXP	Signal status board, 2 outputs.	√	√	√	√	√	√	√	√
	SP/48/01	48 mm diameter spring for barrier.	√							
	SP/61/01	61 mm diameter spring for barrier.	√							√
	SP/72/01	72 mm diameter spring for barrier.	√	√	√				√	
	SP/83/01	83 mm diameter spring for barrier.				√	√			
	SP/85/01	85 mm diameter spring for barrier.				√	√			

	CODE	DESCRIPTION	BI/004	BI/004HP – BI/004HP/115	BI/004HP/IS – BI/004HP/IS/115	BI/006 – BI/006/115	BI/006/IS – BI/006/IS/115	BI/008	BI/001PE	BI/001PC – BI/001PC/115
	SP/85/AS/02	Set of 2 - 85 mm diameter springs for BIONIK8 barrier.						√		
	DLD1/24	Magnetic detector for 1 loop, 2 x 24V AC/DC outputs.	√	√	√	√	√	√	√	√
	DLD2/24	Magnetic detector for 2 loop, 2 x 24V AC/DC outputs + alarm output.	√	√	√	√	√	√	√	√
	RL670	(DIN) Euro profile cylinder key for release system for SMARTY - BIONIK series.	√							
	KT239	DIN bar kit with magnetic supports.	√	√	√	√	√	√	√	√
	KT242	Kit magnetic cable conduit.	√	√	√	√	√	√	√	√
	ALED/4C	4 metre led strip with connecting cable for BIONIK4 booms.	√							
	ALED/6C	6 metre led strip with connecting cable.		√	√				√	
	ALED/8C	8 metre led strip with connecting cable.		√	√			√		
	ALED/12C	12 metre led strip with connecting cable.				√	√			
	R99/BASB40	Package of 40 refractive adhesive strips for barrier boom.	√	√	√	√	√	√	√	√
	ACS/BA/60	Anti-breaking through system for barrier with BA/60 boom.	√	√	√				√	√

DIMENSIONS

Note: All measurements in the drawings are in millimetres

BIONIK BI/004

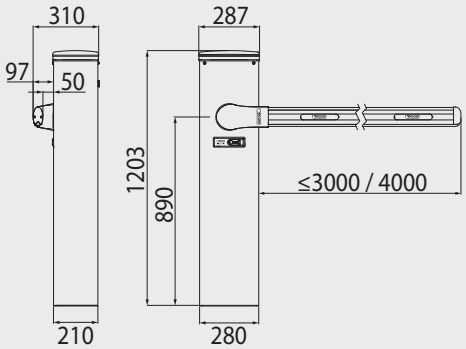

BIONIK BI/001PE - BI/001PC

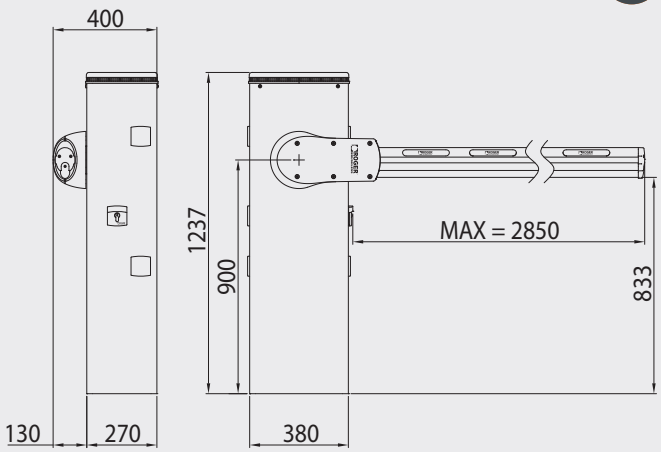

BIONIK BI/004HP

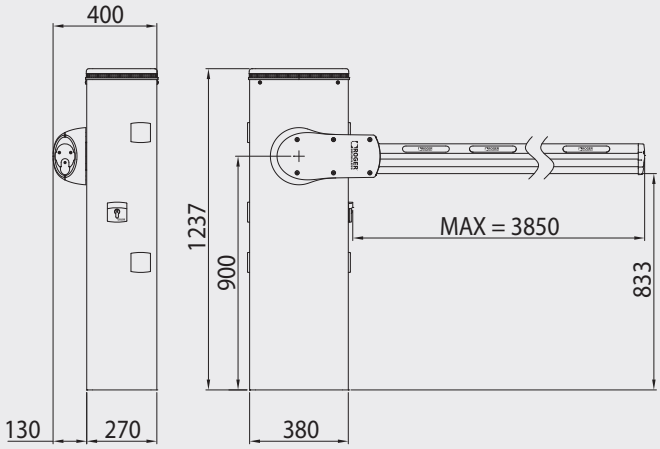

BIONIK BI/006

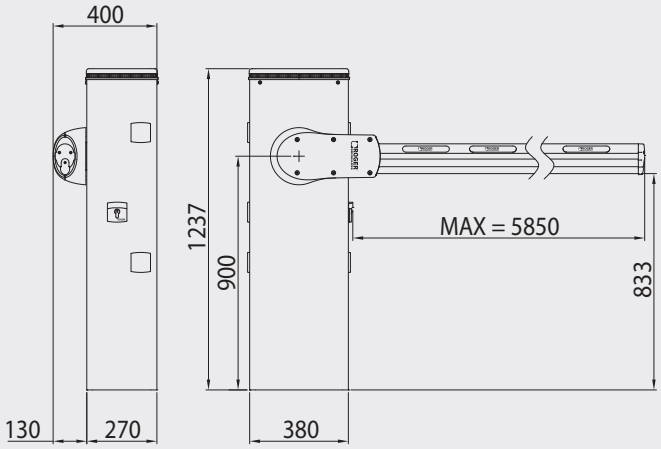

BIONIK BI/008

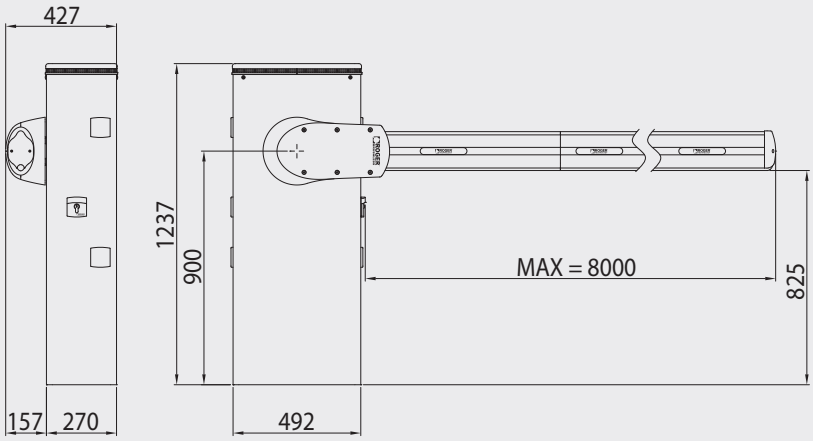

Technical **SPECIFICATIONS**

	BI/004 - BI/004/115	BI/004HP - BI/004HP/115	BI/006 - BI/006/115	BI/008 - BI/008/115	BI/001PE	BI/001PC - BI/001PC/115
Code Description	BRUSHLESS 36V DC Barrier	BRUSHLESS 36V DC Barrier	BRUSHLESS 36V DC Barrier	BRUSHLESS 36V DC Barrier	BRUSHLESS 36V DC Barrier	BRUSHLESS 36V DC Barrier
Boom	up to 4 m	up to 4 m	up to 6 m	up to 8,2 m	up to 3 m	up to 3 m
Line power supply	230V AC - 115V AC 50/60Hz +-10%	230V AC - 115V AC 50/60Hz +-10%	230V AC - 115V AC 50/60Hz +-10%	230V AC - 115V AC 50/60Hz +-10%	230V AC 50/60Hz +-10%	230V AC - 115V AC 50/60Hz +-10%
Brushless motor power supply	36V	36V	36V	36V	36V	36V
Max power	220W	220W	220W	300W	450W	450W
Frequency of use	Continuous	Super Intensive	Super Intensive	Super Intensive	Continuous	Continuous
Operating temperature	-20 +55°C	-20 +55°C	-20 +55°C	-20 +55°C	-20 +55°C	-20 +55°C
Degree of protection	IP54	IP54	IP54	IP54	IP54	IP54
Open time 90°	From 2 to 6 s (with boom up to 3 m) From 3 to 6 s (with boom up to 4 m)	From 3 to 6 s	From 3 to 6 s	From 9 to 29 s	From 2 to 4 s	From 1 to 3 s
Encoder	Absolute digital encoder	Absolute digital encoder	Absolute digital encoder	Absolute digital encoder	Absolute digital encoder	Absolute digital encoder
Typology encoder	Digital SENSORED	Digital SENSORED	Digital SENSORED	Digital SENSORED	Digital SENSORED	Digital SENSORED
Onboard control unit	CTRL	CTRL	CTRL	CTRL	CTRL/P	CTRL/P
Daily operation cycles (open / close - 24 hours non-stop)	5000	5000	5000	2500	8000	12000
Packaged product weight	47 kg	74 kg	74 kg	105 kg	72 kg	87,6 kg
Dimensions	287 x 310 x 1.203 (L x P x H)	380 x 270 x 1237 (L x P x H)	380 x 270 x 1237 (L x P x H)	500 x 270 x 1237 (L x P x H)	380 x 270 x 1237 (L x P x H)	380 x 270 x 1237 (L x P x H)
Release	Handle with a twin-acting elliptical lever and key with a STANDARD cylinder	Release of reduction gear on bearings, with European cylinder key	Release of reduction gear on bearings, with European cylinder key	Release of reduction gear on bearings, with European cylinder key	Release of reduction gear on bearings, with European cylinder key	Release of reduction gear on bearings, with European cylinder key
Number of packages Per pallet	8	6	6	4	6	6

FUNCTIONS
of the BIONIK barriers

DESCRIPTION	BI/004 - BI/004/115	BI/004HP - BI/004HP/115
Boom lenght	up to 4 m	up to 4 m
Onboard digital controller	CTRL	CTRL
Radio receiver type	H93/RX22A/I with fixed code connection H93/RX2RC/I with rolling code connection	H93/RX22A/I with fixed code connection H93/RX2RC/I with rolling code connection
Motor power supply	36V DC	36V DC
Motor management technology (ETC)	SENSORED technology	SENSORED technology
Encoder type	Magnetic Digital SENSORED, 4096 pulses per revolution	Magnetic Digital SENSORED, 4096 pulses per revolution
Mains power supply	230V 50/60 Hz	230V 50/60 Hz
Battery operation	(optional) 2 internal batteries 12V DC 4,5 Amp/h	(optional) 2 internal batteries 12V DC 4,5 Amp/h
Energy consumption	Very low consumption	Very low consumption
Number of motors	1	1
Power supply for accessories	24V DC	24V DC
Flashing light barrier type (included)	24V DC LED	24V DC LED
Flashing light boom type	24V DC LED - Strip led, lenght 4 m	24V DC LED - Strip led, lenght 8 m
Output for barrier opening indicator and automation system on warning light	√	√
Output for courtesy light	40W	40W
Timed and guaranteed automatic closing	√	√
Gate edge safety management, 8.2KΩ or standard	√	√
Limit switch type	Adjustable open and closed position Mechanical travel limits	Adjustable open and closed position Mechanical travel limits
Force adjustment in nominal movement	√	√
Force adjustment in start-up and deceleration	√	√
Obstacle detection (also in position recovery mode) - Motor reversal	√	√
Opening and closing speed setting	√	√
Deceleration during opening and closing	√	√
Opening and closing approach distance setting	√	√
Starting acceleration (soft-start) for opening and closing manoeuvres	√	√
Safeguarded closure/opening function	√	√
Stopping space and motor braking	√	√
Partial opening control MASTER / SLAVE mode	√	√
Human presence control	√	√
Condominium function	√	√
Safety device configuration	√	√
Installation test function	(prog button)	(prog button)
Operating temperature	-20°C/+55°C	-20°C/+55°C
Inverter thermal protection	√	√
Magnetic electro-lock management	(optional) √	(optional) √
Detector loop management	(optional) √	(optional) √
Clock function (included)	√	√
Parking access mode function (included)	√	√
External status type output setting	(optional) √	(optional) √
Restore factory default values	√	√
Information on use of motor	√	√
Security password management	√	√
Enabling of anti-breaking through system	√	√

BI/006 - BI/006/115	BI/008 - BI/008/115	BI/001PE	BI/001PC - BI/001PC/115
up to 6 m	up to 8,2 m	up to 3 m	up to 3 m
CTRL	CTRL (since firmware version r3.50)	CTRL/P	CTRL/P
H93/RX22A/I with fixed code connection H93/RX2RC/I with rolling code connection	H93/RX22A/I with fixed code connection H93/RX2RC/I with rolling code connection	H93/RX22A/I with fixed code connection H93/RX2RC/I with rolling code connection	H93/RX22A/I with fixed code connection H93/RX2RC/I with rolling code connection
36V DC	36V DC	36V DC	36V DC
SENSORED technology	SENSORED technology	SENSORED technology	SENSORED technology
Magnetic Digital SENSORED, 4096 pulses per revolution	Magnetic Digital SENSORED, 4096 pulses per revolution	Magnetic Digital SENSORED, 4096 pulses per revolution	Magnetic Digital SENSORED, 4096 pulses per revolution
230V 50/60 Hz	230V 50/60 Hz	230V 50/60 Hz	230V 50/60 Hz
(optional) 2 internal batteries 12V DC 4,5 Amp/h	(optional) 2 internal batteries 12V DC 4,5 Amp/h	(optional) 2 internal batteries 12V DC 4,5 Amp/h	(optional) 2 internal batteries 12V DC 4,5 Amp/h
Very low consumption	Very low consumption	Very low consumption	Very low consumption
1	1	1	1
24V DC	24V DC	24V DC	24V DC
24V DC LED	24V DC LED	24V DC LED	24V DC LED
24V DC LED - Strip led, lenght 12 m	24V DC LED - Strip led, lenght 8 m	24V DC LED - Strip led, lenght 6 m	/
√	√	√	√
40W	40W	40W	40W
√	√	√	√
√	√	√	√
Adjustable open and closed position Mechanical travel limits	Adjustable open and closed position Mechanical travel limits	Adjustable open and closed position Mechanical travel limits	Adjustable open and closed position Mechanical travel limits
√	√	√	√
√	√	√	√
√	√	√	√
√	√	√	√
√	√	√	√
√	√	√	√
√	√	√	√
√	√	√	√
√	√	√	√
√	√	/	/
√	√	√	√
√	√	√	√
√	√	√	√
(prog button)	(prog button)	(prog button)	(prog button)
-20°C/+55°C	-20°C/+55°C	-20°C/+55°C	-20°C/+55°C
√	√	√	√
(optional) √	(optional) √	(optional) √	(optional) √
(optional) √	(optional) √	(optional) √	(optional) √
√	√	√	√
√	√	√	√
(optional) √	(optional) √	(optional) √	(optional) √
√	√	√	√
√	√	√	√
√	√	√	√
		√	√

OVERVIEW OF THE BARRIERS

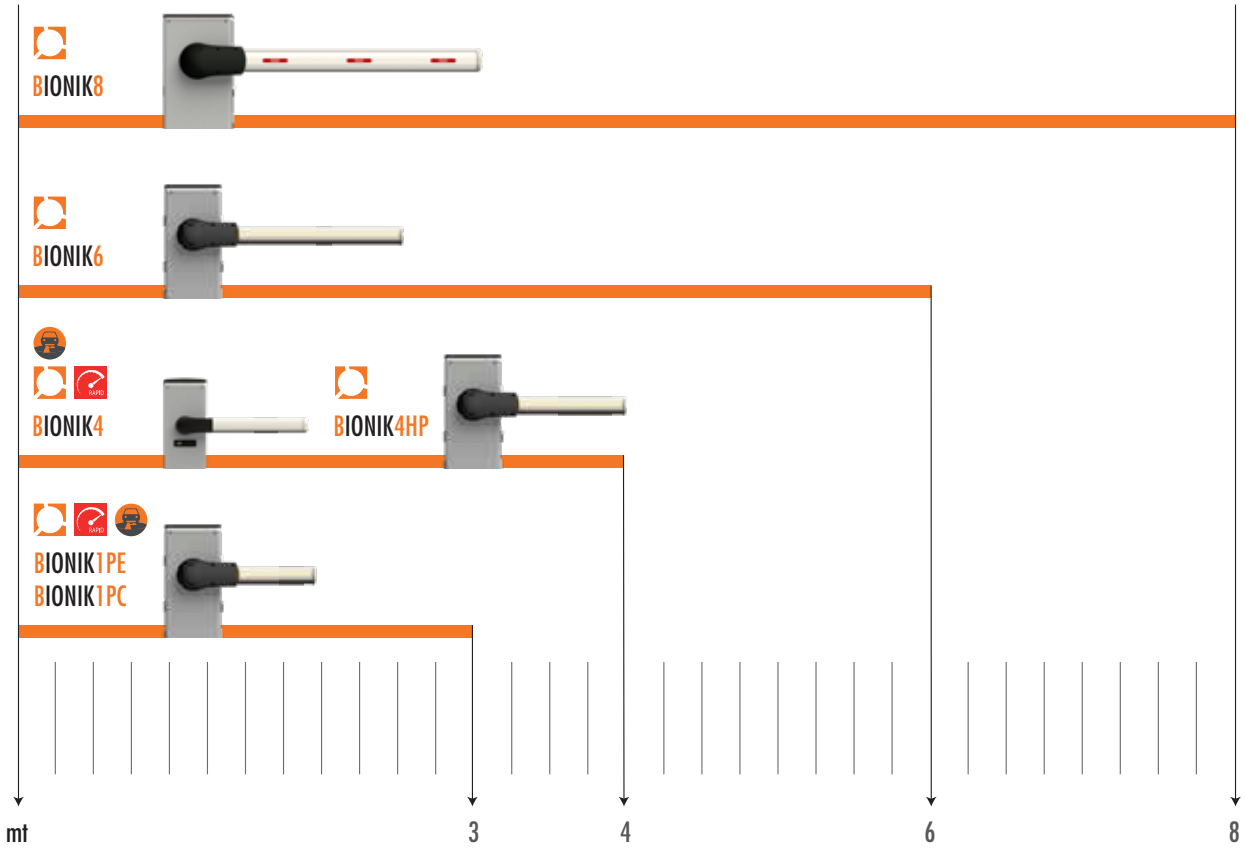

	RESIDENTIAL	COMMERCIAL	INDUSTRIAL	PARKING
BI/004	✓	✓	✓	✓
BI/004/115	✓	✓	✓	✓
BI/004HP	✓	✓	✓	
BI/004HP/115	✓	✓	✓	
BI/004HP/IS	✓	✓	✓	
BI/004HP/IS/115	✓	✓	✓	
BI/006	✓	✓	✓	
BI/006/115	✓	✓	✓	
BI/006/IS	✓	✓	✓	
BI/006/IS/115	✓	✓	✓	
BI/001PE			✓	✓
BI/001PC				✓
BI/001PC/115				✓
BIONIK8		✓	✓	

ROGER TECHNOLOGY

WWW.WEAREBRUSHLESS.COM

ROGER BRUSHLESS
PIONEERS IN ADVANCED TECHNOLOGY

PREMIUM DEALER / AUTHORISED DEALER

ROGER TECHNOLOGY

Via S. Botticelli, 8 - 31021, Bonisiolo di Mogliano Veneto (TV) - ITALY
T. +39 041 5937023 - F. +39 041 5937024

WWW.ROGERTECHNOLOGY.COM

AZIENDA ITALIANA

11/2018

IMMAGINE ASSOCIATI